慈溪市万捷电子有限公司
CIXI WANJIE ELECTRONIC CO., LTD

REVISION RECORD				
REV.	DESCRIPTION	ECN No.	APPROVED	DATE

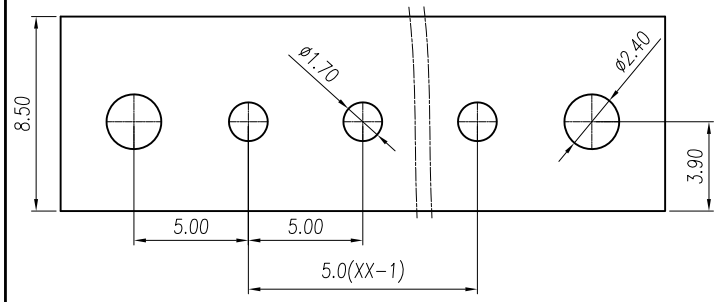

P.C.B. LAYOUT

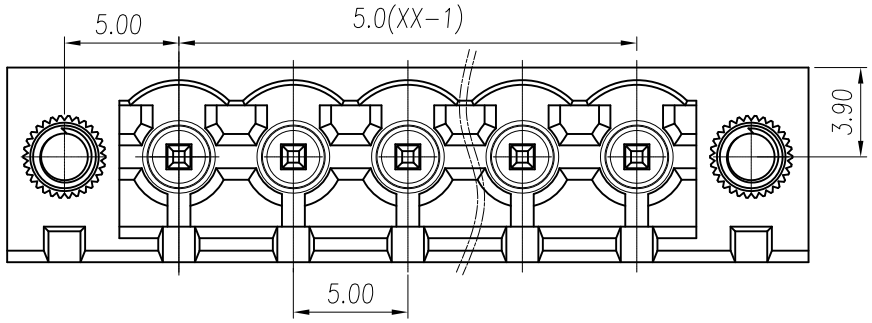

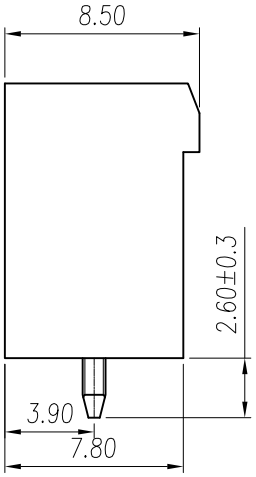

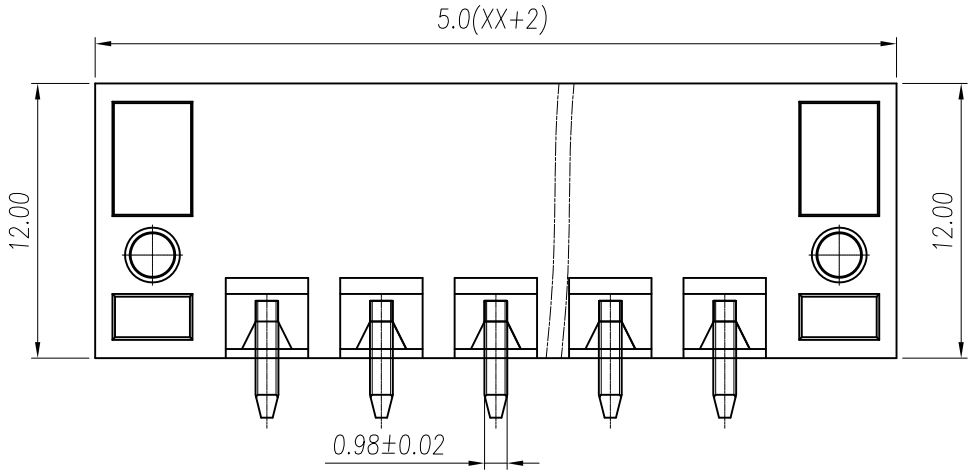

UL/CUL 技术 参数 UL/CUL Technical Data			
等 级 Use Group	B	C	D
额定电压 Rated Voltage [V]	300	-	300
额定电流 Rated Current [A]	15	-	10
接线范围 Wire Range 单/多芯线 Solid/Stranded [AWG]	/		
耐电压 Withstanding Voltage	1600V/1Min		
IEC 技术参数 IEC Technical Data			
过电压类别 Overvoltage Category	III	III	II
污染等级 Contamination Class	3	2	2
额定电压 Rated Voltage [V]	250	320	400
额定电流 Rated Current [A]	12	12	12
额定冲击电压 Impulse withstand voltage [KV]	4	4	4
导线截面积 Conductor cross section 硬质/柔性导线 Solid/ flexible [mm²]	/		
材 料 Material			
绝缘材料 Insulation Material	LCP		
阻燃等级 Imflammability	UL94V-0		
导体材料 Contactor Material	铜合金 Copper alloy		
导体表面镀层 Contactive Coating	镀锡 Sn Plated		
一般参数 Other Data			
间距 Pitch /极数 Poles [mm] / [P]	5.0 /02~24		
剥线长度 Stripping Length [mm]	/		
螺丝 Screw/扭矩 Torque(Max) [N.m]	/		
工作温度 Operating temperature [°C]	-40~130		
引针尺寸 Pin Dimensions [mm]	1.0*1.0		
PCB板孔径 PCB Hole Diameter [mm]	Ø1.7		

linear dimension(Tolerances Standard GB/T 14486-2008)								—	▱	⊥
variable range	to 6	over 6 to 10	over 10 to 30	over 30 to 60	over 60 to 100	over 100 to 160	over 160 to	to 10	over 10 to 100	over 100 to
tolerance	±0.20	±0.30	±0.50	±0.70	±1.00	±1.30	±1.60	0.10	0.30	0.60

单位/UNITS	mm	尺寸/SIZE	A4	比例/SCALE	1:1	第三视角/THIRD ANGLE PROJECTION	版本/REV	V0
慈溪市万捷电子有限公司 CIXI WANJIE ELECTRONIC CO., LTD						名称/TITLE	WJ2EDGVM-THT-5.0-XXP-1YY-00A	